Published: 11-May-2011

Exterior Trim and Ornamentation - A-Pillar Moulding LH

Removal and Installation

Removal

• NOTE: This procedure is also applicable for the RH moulding.

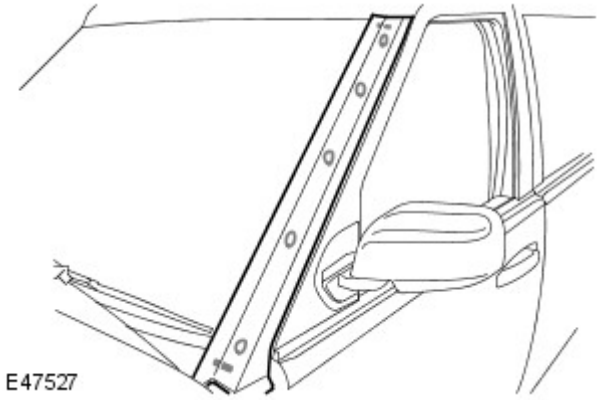

1. Open the bonnet.

2. Remove the A-pillar moulding.

- Release and discard the 5 clips.

Installation

1. NOTE: The lower clip is unique to the others and must only be installed to the lowest position on the moulding.

To install, reverse the removal procedure.

1. New clips must be used.

mcx30.com

Published: 11-May-2011

Exterior Trim and Ornamentation - Front Fender Moulding

Removal and Installation

Removal

1. Remove the headlamp assembly.
For additional information, refer to: Headlamp Assembly (417-01 Exterior Lighting, Removal and Installation).

2. WARNING: Do not work on or under a vehicle supported only by a jack. Always support the vehicle on safety stands.

Raise and support the vehicle.

3. Remove the mud flap.

- Remove the 3 retaining screws.

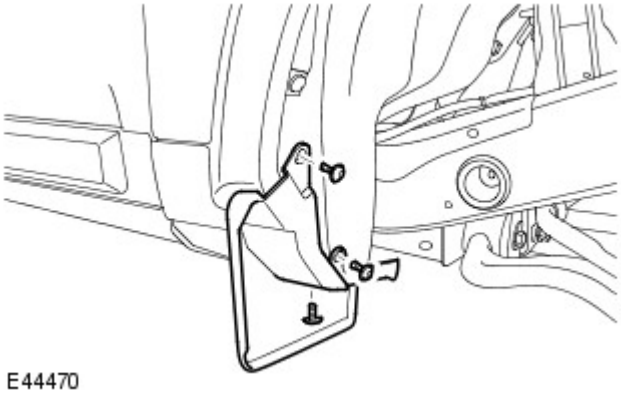

E44470

4. Remove the 4 retainers.

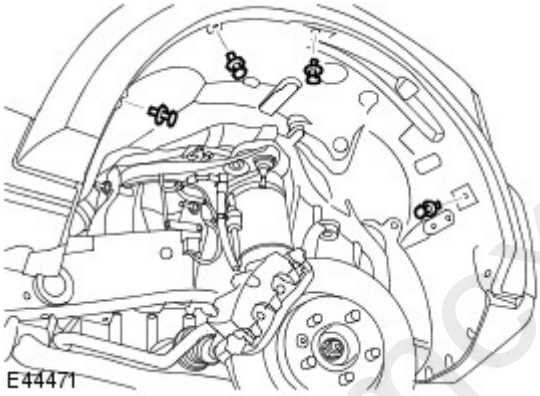

E44471

5. Remove the fender moulding.

- Remove the 2 screws.
- Carefully release the 10 clips.

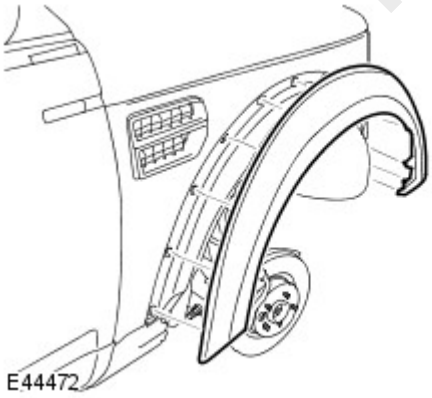

E44472

mex30.com

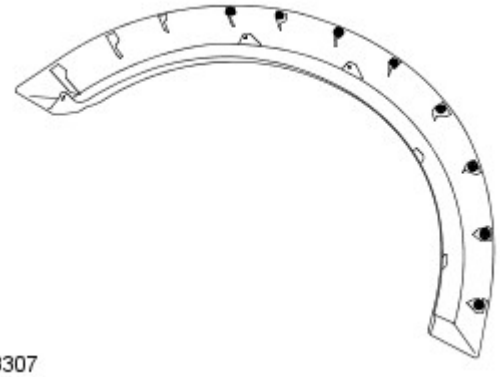

E53307

6. NOTE: Do not disassemble further if the component is removed for access only.

Remove the clips from the moulding.

Installation

1. To install, reverse the removal procedure.

2. Install the headlamp assembly.
For additional information, refer to: Headlamp Assembly (417-01 Exterior Lighting, Removal and Installation).

mcx30.com

Published: 11-May-2011

Exterior Trim and Ornamentation - Rear Quarter Panel Moulding

Removal and Installation

Removal

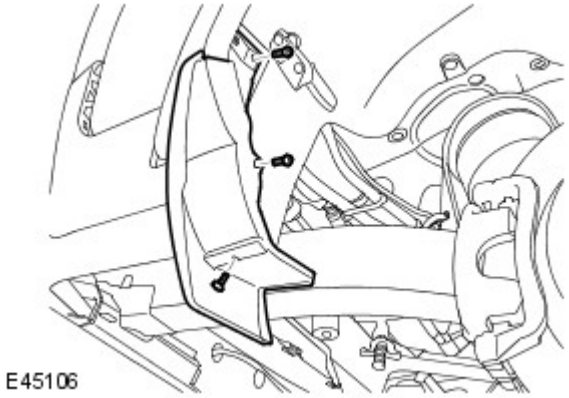

1. Remove the mud flap.

- Remove the 3 screws.

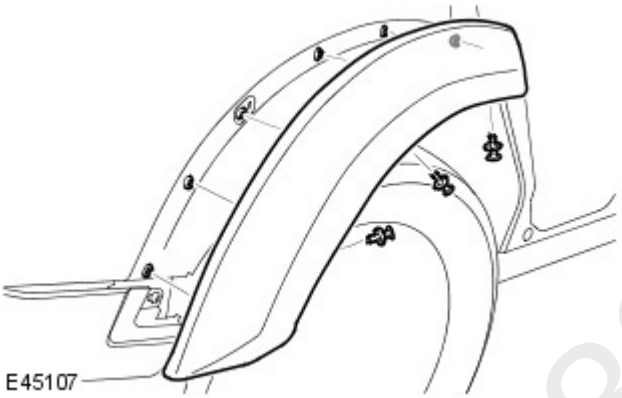

2. Remove the rear quarter panel moulding.

- Remove the 3 clips from the underside of the moulding.
- Release the 6 clips from the rear quarter panel.

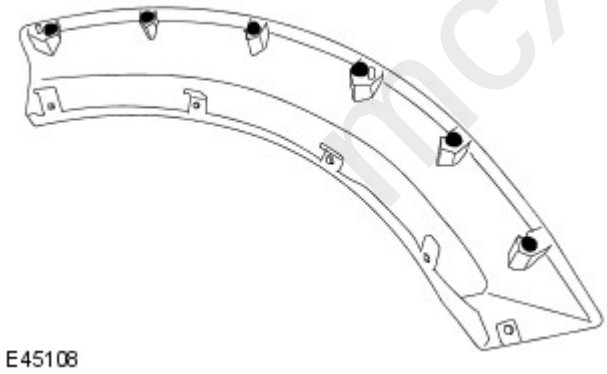

3. NOTE: Do not disassemble further if the component is removed for access only.

Remove the clips from the moulding.

Installation

1. To install, reverse the removal procedure.

mcx30.com

Published: 11-May-2011

Exterior Trim and Ornamentation - Radiator Grille

Removal and Installation

Removal

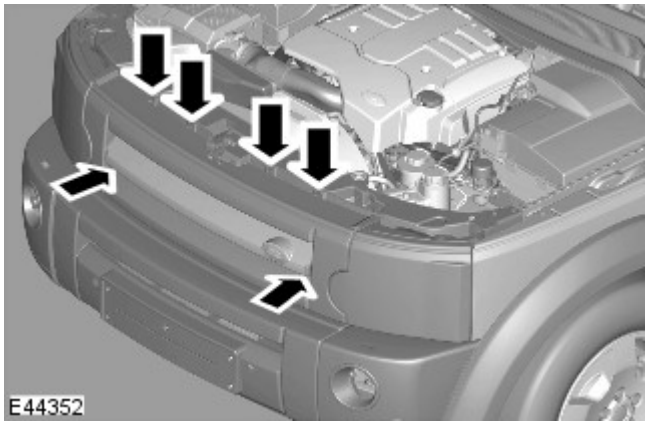

1. Remove the radiator grille.

- Open the hood.
- Release the 6 clips.

Installation

1. To install, reverse the removal procedure.

mcx30.com

Published: 11-May-2011

Exterior Trim and Ornamentation - Rear Quarter Window Moulding

Removal and Installation

Removal

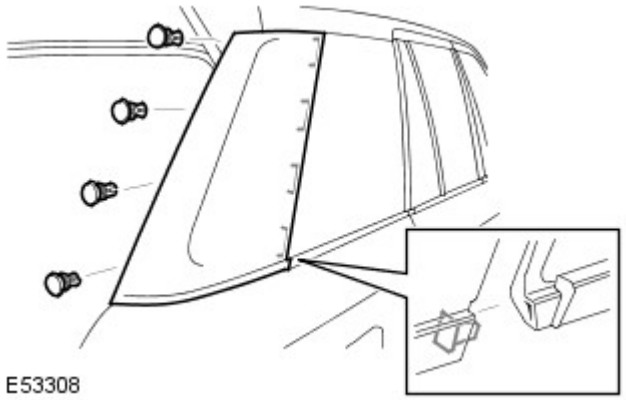

1. Open the liftgate.
2. Remove the rear quarter window moulding.
   - Remove the 4 clips.
   - Release the locating peg.

Installation

1. Install the rear quarter window moulding.
   - Position the locating peg.
   - Secure the clips.

mcx30.com